DTC	P2769	Short in Torque Converter Clutch Solenoid Circuit (Shift Solenoid Valve SL)

DTC	P2770	Open in Torque Converter Clutch Solenoid Circuit (Shift Solenoid Valve SL)

DESCRIPTION

The shift solenoid valve SL is turned "ON" and "OFF" by signals from the ECM in order to control the hydraulic pressure operation, the lock-up relay valve, which then the controls operation of the lock-up clutch.

DTC No.	DTC Detection Condition	Trouble Area
P2769	ECM detects short in solenoid valve SL circuit 1 time when solenoid valve SL is operated (2-trip detection logic)	• Short in shift solenoid valve SL circuit • Shift solenoid valve SL • ECM
P2770	ECM detects open in solenoid valve SL circuit 1 time when solenoid valve SL is not operated (2-trip detection logic)	• Open in shift solenoid valve SL circuit • Shift solenoid valve SL • ECM

MONITOR DESCRIPTION

Based on the signals from the Throttle Position Sensor, the Airflow Meter and the Crankshaft Position Sensor, the ECM sends a signal to the SL Solenoid Valve to regulate the hydraulic pressure and provide smoother gearshifts. The shift-solenoid valve SL responds to commands from the ECM. The valve controls the lock-up relay valve to perform the torque-converter lock-up function. If the ECM detects an open or short circuit for shift-solenoid SL, it will illuminate the MIL.

MONITOR STRATEGY

Related DTCs	P2769: Shift solenoid valve SL/Range check (Low resistance) P2770: Shift solenoid valve SL/Range check (High resistance)
Required sensors/Components	Shift solenoid valve SL
Frequency of operation	Continuous
Duration	1 time
MIL operation	2 driving cycles
Sequence of operation	None

AX

TYPICAL ENABLING CONDITIONS

P2769: Range check (Low resistance):

The monitor will run whenever this DTC is not present.	None
Shift solenoid valve SL	ON
Time after solenoid OFF to ON	More than 0.008 sec.

P2770: Range check (High resistance):

The monitor will run whenever this DTC is not present.	None
Shift solenoid valve SL	OFF
Time after solenoid ON to OFF	More than 0.008 sec.

TYPICAL MALFUNCTION THRESHOLDS

P2769: Range check (Low resistance):

Intelligent power MOS diagnosis fail signals detected while the solenoid is operated	Fail at solenoid resistance: 8 Ω or less

P2770: Range check (High resistance):

Intelligent power MOS diagnosis fail signals detected while the solenoid is not operated	Fail at solenoid resistance: 100 kΩ or more

COMPONENT OPERATING RANGE

Shift solenoid valve SL	Resistance: 11 to 15 Ω at 20°C (68°F)

WIRING DIAGRAM

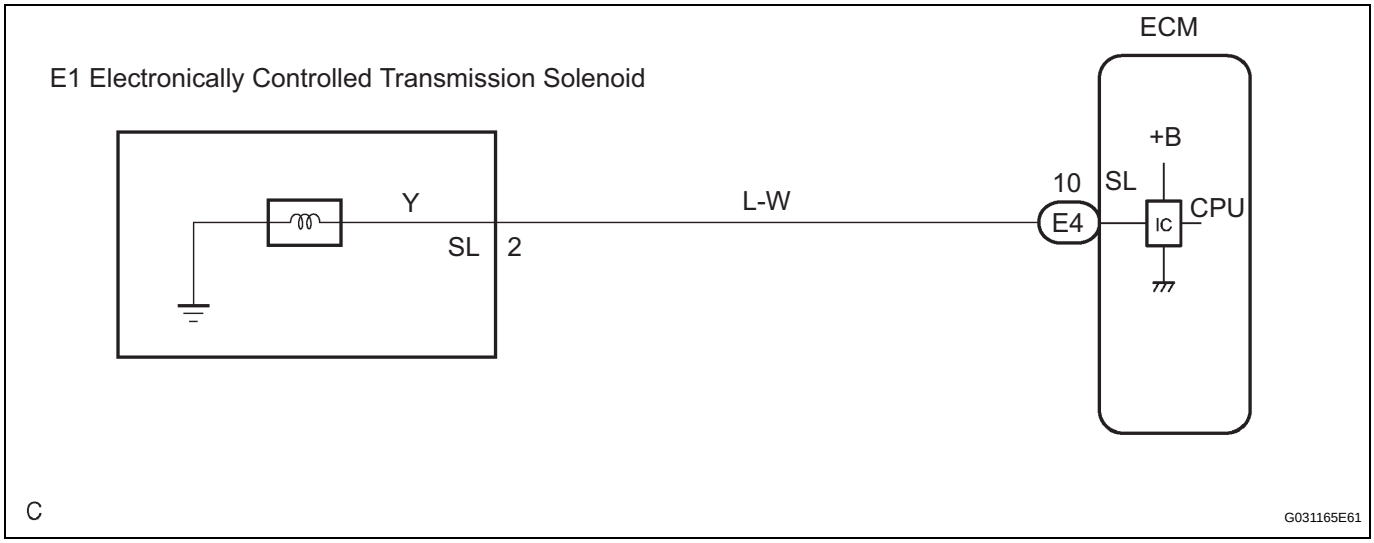

INSPECTION PROCEDURE

AX

1	INSPECT TRANSMISSION WIRE (SL)

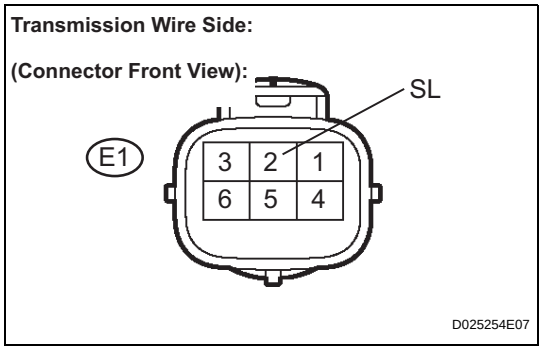

(a) Disconnect the transmission wire connector from the transaxle.

(b) Measure the resistance according to the value(s) in the table below.

Standard resistance

Tester Connection	Specified Condition 20°C (68°F)
2 - Body ground	11 to 15 Ω

NG → **Go to step 3**

OK

2 CHECK HARNESS AND CONNECTOR (TRANSMISSION WIRE - ECM)

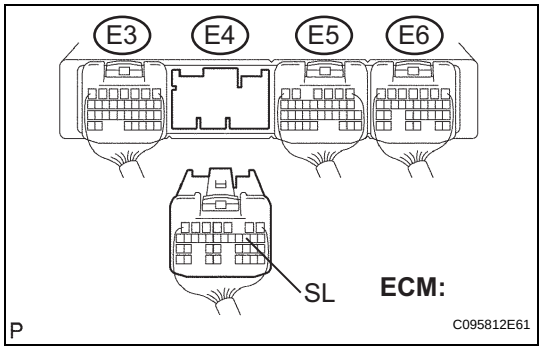

(a) Connect the transmission wire connector.
(b) Disconnect the ECM connector.
(c) Measure the resistance according to the value(s) in the table below.

Standard resistance

Tester Connection	Specified Condition 20°C (68°F)
E4-10 (SL) - Body ground	11 to 15 Ω

NG → **REPAIR OR REPLACE HARNESS OR CONNECTOR**

OK

REPLACE ECM

3 INSPECT SHIFT SOLENOID VALVE (SL)

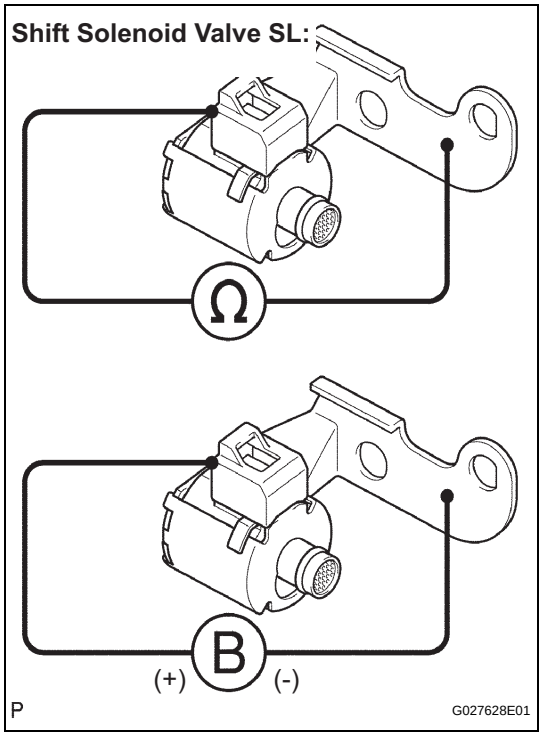

(a) Remove the shift solenoid valve SL.
(b) Measure the resistance according to the value(s) in the table below.

Standard resistance

Tester Connection	Specified Condition 20°C (68°F)
Solenoid Connector (SL) - Solenoid Body (SL)	11 to 15 Ω

(c) Connect the positive (+) lead to the terminal of the solenoid connector, and the negative (-) lead to the solenoid body.

OK:

The solenoid valve makes an operating sound.

NG → **REPLACE SHIFT SOLENOID VALVE (SL)**

OK

REPAIR OR REPLACE TRANSMISSION WIRE

AX